FIITJEE ALL INDIA INTERNAL TEST SERIES

SOLUTIONS

SECTION - I : CHEMISTRY
Part – A
(Single Correct Choice Type)

1. Weak acid + weak base $\rightarrow$ salt + water
Metal + mineral acid $\rightarrow$ salt + water
Metal Oxide + mineral acid $\rightarrow$ salt + water

3. Weight of KCl solution = 63 – 25 = 38 g
Weight of KCl = 40 – 25 = 15 g $\Rightarrow$ Solvent weight = 38 – 15 = 23 g
$\therefore$ Solubility = $\frac{100 \times 15}{23} = 65.2$

5. $NaHCO_3 + H_2SO_4 \rightarrow Na_2SO_4 + H_2O + CO_2$

(9-10) $2Ag + H_2S \rightarrow Ag_2S + H_2$

11. $NaHSO_4$ Salt have replaceable Hydrogen

12. [(Strong Base) NaOH + H_3PO_3 (Weak Acid)]

SECTION – II : MATHEMATICS

Part – A

(Single Correct Choice Type)

1. By using Wilson theorem

$\lfloor 19-1+1$ is divisible by 19

Now

$\lfloor 18+1 \Rightarrow \frac{\lfloor 22}{22\times 21\times 20\times 19}+1$

$\Rightarrow \frac{\lfloor 23-1}{22\times 21\times 20\times 19}+1$

$\frac{-1+1}{22\times 21\times 20\times 19}=0$

so answer is C

2. $\lfloor 30 = 2^{26}\times 3^{14}\times 5^{7}\times 7^{4}\times 11^{2}\times 13^{2}\times 17^{1}\times 19^{1}$

$\Rightarrow\ 26+14+7+4+2+2+1+1+1+1=59$

3. $\frac{4}{x-y}+\frac{12}{x+y}=2$

$\frac{12}{x-y}+\frac{12}{x+y}=4$

$\frac{8}{x-y}=2$

4 = x – y

and $\frac{12}{x+y}=1$

x + y = 12

x – y = 4

2x = 16

x = 8

4. $x-\frac{3}{4}y=12 \Rightarrow 4x-3y=48$

$y-\frac{2}{3}x=12 \qquad 3y-2x=36$

and y = 12 + 28 $\qquad$ 2x = 84

= 40 $\qquad$ x = 42

so x + y = 82

5. M = 100c + 10b + a

N = 100a + 10b + c

N – M = 99 (c – a)

so GCD = 99

6. Given

x(x + y + z) = 135

y (x + y + z) = 351

z(x + y + z) = 243

so h.c.f

x + y + z = 27

x = 5

y = 13

z = 9

25 + 169 + 81 = 275

7. $(76-1)^{64^{76}}$
so remainder is 1
so unit digit is 3

8. $x=\sqrt{8+2x}$
$x^2=8+2x$
$x^2-2x-8=0$
$x^2-4x+2x-8=0$
$x(x-4)+2(x-4)=0$
$x = -2, 4$

9. $(2)^{105} + (3)^{105}$
divisible by 5
$(2^3)^{35}+\left(3^3\right)^{35}$
$\Rightarrow$ divisible by 35
$(2^5)^{21} + (3^5)^{105}$
divisible by 275

10. $\left(2^{32}\right)^3+1$
$2^{32} + 1$

11. $x^2 - px - (p + q) = 0$
$\alpha + \beta = p$
$\alpha\ \beta = -p - q$
$\alpha\beta + p = -q$
$\alpha\beta + \alpha + \beta = -q$
$\alpha(1 + \beta) + \beta = -q$
$$\frac{\alpha^2+2\alpha+1}{\alpha^2+2\alpha-\alpha\beta-\alpha-\beta}+\frac{\beta^2+2\beta+1}{\beta^2+2\beta-\alpha\beta-\alpha-\beta}=1$$

12. $\frac{p^2+q^2}{pq}=\frac{2}{3}$
$\frac{(2-m)^2}{m}=\frac{8}{3}$
$\frac{m_1^3+m_2^3}{m_1^2m_2^2} = 99$

13. $\frac{(3k+1)}{(k^2+1)}=\frac{3}{k-2}$

14. $\frac{2}{a+b}=\frac{3}{(2a-b)}=\frac{7}{21}$

15. $\frac{2(5-1)^{15}}{5}$
$\Rightarrow 5 - 2 = 3$

16. $(68-1)^{67} + 67$

Part – B

(Matrix Match Type)

4. (A) Put $x^{1/3} = t$ then $t^2 + t - 2 = 0 \Rightarrow t = -2$ or 1

(B) $2^{x-1} + 2^{x+1} = 1280 \Rightarrow 2^x \times \frac{5}{2} = 1280 \Rightarrow x = 9$

(C) $2^{100} = \left(2^3\right)^{33}.2$, Remainder = 2

(D) $x^2 + 2x + 2 = (x+1)^2 + 1 \Rightarrow$ Min. Value = 1

SECTION - III : PHYSICS

Part – A

(Single Correct Choice Type)

1.

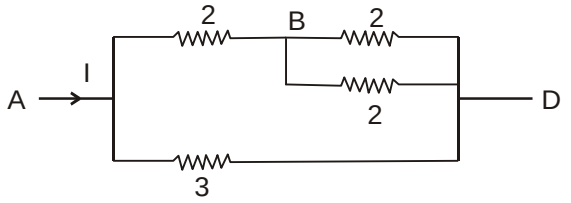

$\frac{3}{2}\Omega$ as per dig

$\therefore$ V = IR

$I = \frac{10}{3} \times 2 = \frac{20}{3} A$

In CD; current flowing = current through AC + Current through BC

$\therefore \frac{5}{3}A + \frac{10}{3}A = \frac{15}{3}A$

$\Rightarrow$ 5A

2. Req = 2+ 4 = 6Ω

$I = \frac{12}{6} = 2A$

Current through 3Ω = $\frac{4}{3}$ A

P.d. $= IR$

$\therefore = \frac{4}{3} \times 3 = 4V$

3.

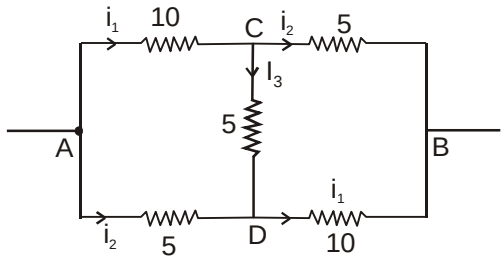

Potential at A = 220V
Potential at B = OV
Let potential at C = X, then at D = 220 – X
By path symmetry, current in AC = current in BD.
similarly current in AD = current in BC
Apply KCl at C
thus $i_3 = i_1 - i_2$
By ohm's law, we can say

$$\frac{x-(220-x)}{5} = \frac{(220-x)-0}{10} = \frac{x-0}{5}$$

$$\frac{2x}{5} - \frac{220}{5} = \frac{220}{10} - \frac{x}{10} - \frac{x}{5}$$

on solving

$$\frac{7x}{10} = 66$$

$$x = \frac{660}{7}$$

Potential at D = $220 - \frac{660}{7}$

$= \frac{880}{7}$

$\therefore\ i_1 = \frac{880}{7\times 10} = \frac{88}{7}$

$i_2 = \frac{660}{5\times 7} = \frac{132}{7}$

$i_1 + i_2 = \frac{220}{7}$

$Req = \frac{220}{\frac{220}{7}} = 7\Omega$

4.

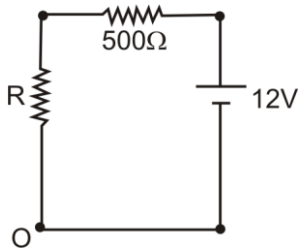

No deflection in galvanometer implies potential difference across R is also 4V.
P.d. across 500 Ω = 8V

$i = \frac{8}{500}$

then; $\frac{4}{8}\times 500 = R = 250\Omega$

5. No. current in branch implies no potential difference. Thus current in leftmost

15Ω resistor = $\frac{15}{15}$ = 1A

Equivalent resistance of the circuit = 60Ω
Current from battery = 3A
$\therefore$ E = 180V

6.

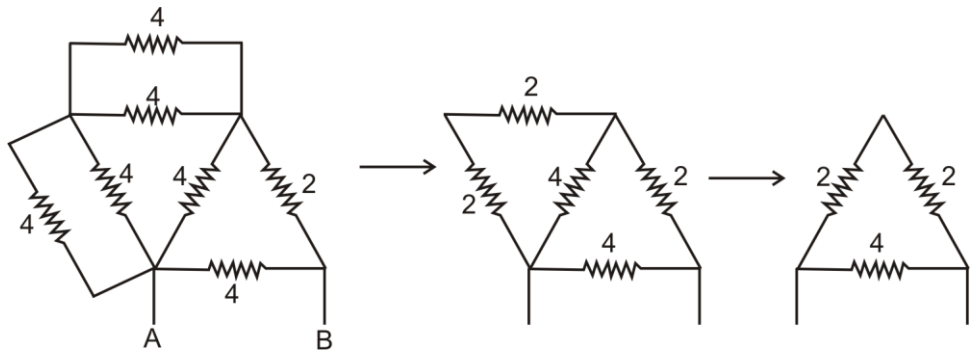

7.

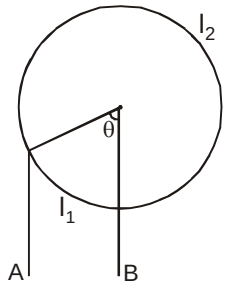

Let R_1 is resistance for resistor of length l, & R_2 of length l_2
we can say

$$R_1 = \left(\frac{R}{\ell}\right)\ell_1$$

$$R_2 = \left(\frac{R}{\ell}\right)\ell_2$$

Where $\ell_1 = r\theta$

$\ell_2 = r(2\pi - \theta)$ (where r is the radius of the circle)

If $\ell = 2\pi r$ (length of wire = circumference of circle)

we can say $r = \frac{\ell}{2\pi}$

$$\therefore\ \ell_1 = \frac{\ell}{2\pi}(\theta)$$

$$\ell_2 = \frac{\ell}{2\pi}(2\pi - \theta)$$

Now since resistors are connected in parallel

$$\therefore\ \frac{1}{R_{eq}} = \frac{1}{R_1} + \frac{1}{R_2} \Rightarrow R_{eq} = \frac{R_1R_2}{R_1 + R_2}$$

$$Req = \frac{\frac{R}{\ell}\left(\frac{\ell}{2\pi}\right)\theta.\frac{R}{\ell}\frac{\ell}{2\pi}(2\pi - \theta)}{\frac{R}{\ell}\left(\frac{\ell}{2\pi}\right)(\theta + 2\pi - \theta)} \Rightarrow \frac{R\theta(2\pi - \theta)}{4\pi^2}$$

8. Since the bulbs are connected in series, 25W bulb will fuse & hence in current will be flowing through the circuit.

9. Apply horizontal symmetry

$$\frac{1}{Req} = \frac{1}{1} + \frac{1}{3} = \frac{3+1}{3} = \frac{4}{3}$$

$$Req = \frac{3}{4}$$

10. $i = \frac{3}{\frac{3}{4}} = 4A$

12. $\frac{6-2}{2} = \frac{4}{2} = 2A$

13. By redrawing the circuit

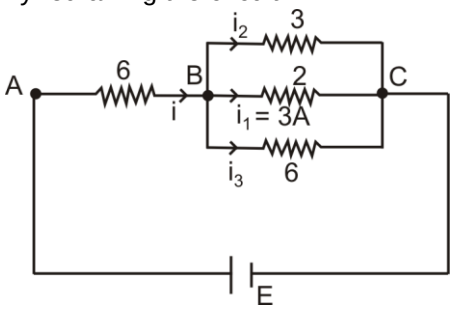

$i_1 = 3A$ (given)

$\therefore$ $i_2 = 2A$

$i_3 = 1A$

$i = i_1 + i_2 + i_3 = 6A$

P.d. across AB = 36V

P.d. across BC = 6V

Total EMF = 42V

14. $P = I^2R = (2\times2) \times 3$

$= 12W$

15.

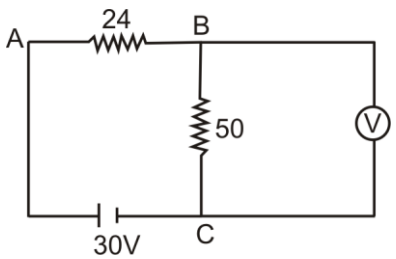

Pd across BC = 18C

$\therefore$ Pd across AB = 30 – 18 = 12V

$i = \frac{12}{24} = 0.5A$

16. We can say

$$\left(\frac{50r}{50+r}\right) + 24 = \frac{30}{0.5}$$

r = 128.5