FIITJEE

MOCK TEST

for **Class Xth**

Set – I

MATHEMATICS (CBSE)

SOLUTIONS

SECTION – A

1.	**D**	2.	**D**	3.	**B**	4.	**B**
5.	**A**	6.	**B**	7.	**A**	8.	**A**
9.	**C**	10.	**D**	11.	100°	12.	**2**
13.	**2 cm**	14.	$9:1$	15.	$k \le 4$	16.	**900**
17.	**First term** = 28						
18.	**25 cm**	19.	**k = 3**	20.	**a = 2**		

SECTION – B

21.	**42**	22.	**p = 5**	23.	**31st term OR** 6n – 7
24.	**18 cm**	25.	**0**		

SECTION – C

27.	**12**	28.	**374 OR 137.5**				
29.	**48.25**	30.	**6, 5**				
32.	**45 years**. **OR** $\frac{7}{15}$			33.	**12**	34.	**8**

SECTION – D

35.	**16, 12**	36.	**0 OR (2, 6, 10)** and (15, 6, –3)
37.	30°	38.	**9.03 cm^2**
39.	**5 hrs, 3** hrs	**OR**	**8 km/hr,** 3 km/hr

1. D
1. Put x = 2

$8+4(2)^2-2p+8=0$

$p=16$

2. D
2. Mean of the data = 24

Median = 26

Mode = 3 median – 2 mean

$=3\times 26-2\times 24=78-48$

Mode = 30

3. B
3. First term = 21

Common difference $=42-21=21$

$210=21+(n-1)21$

$(n-1)\times 21=210-21\Rightarrow (n-1)=\frac{189}{21}$

$\Rightarrow (n-1)=9$

$n=10$

4. B
4. By using Pythagoras theorem in ΔOBA

$AB=\sqrt{10^2-6^2}=8$

Now area of quadrilateral ABOC

$=\left(\frac{1}{2}\times 8\times 6\right)\times 2=48\text{ cm}^2$

Option (B)

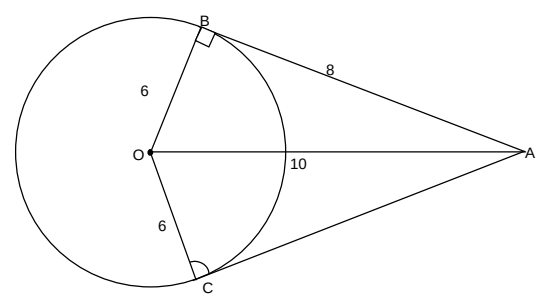

5. A
5. From figure

$\angle OPQ+\angle QPR=90^o$

$\Rightarrow \angle OPQ=40^o=\angle OQP$

$\Rightarrow \angle POQ=180^o-2\times 40^o$

$=100^o$

Option (A)

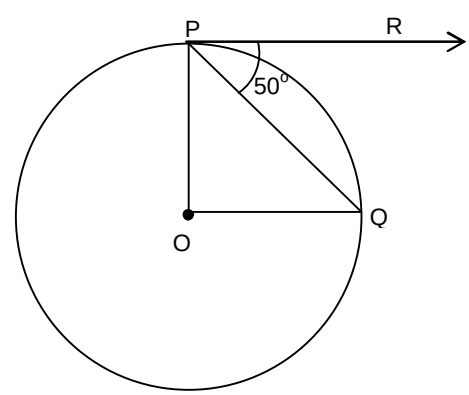

6. B
6. Given $2\times\frac{22}{7}\times r-r=37$

$\Rightarrow r=7$ cm

So, circumference $=2\times\frac{22}{7}\times 7=44$ cm

7. A

7. 213, 205, 197,….37

$\Rightarrow 37 = 213 + (n-1)\times(-8)$

$\Rightarrow 37 - 213 = (n-1)\times(-8)$

$\Rightarrow -176 = (n-1)\times -8$

$(n-1) = \frac{176}{8}$

$(n-1) = 22$

$n = 23$

Middle term is 12th term

$T_{12} = a + 11d$

$= 213 + 11\times(-8)$

$= 213 - 88$

$T_{12} = 125$

8. A

8. $\angle P = \angle A = 32^o$, $\angle C = \angle R = 65^o$, $\angle B = 180 - (\angle A + \angle C)$

$= 180 - (32^o + 65^o)$

$= 83^o$

9. C

9. HCF x LCM = p x q

$= 50 \times 20 = 1000$

10. D

10. Consecutive even numbers $\Rightarrow 2n, 2n+2$

$2n, 2(n+1)$

HCF of $2n, 2(n+1) = 2$

5 Fill in the blanks

11. 100°

11. PA = PB

…[Tangents drawn from external point are equal]

$\therefore \angle PBA = \angle PAB = 50^o$

…[Angles equal to opposite sides]

$\angle APB = 180^o - 50^o - 50^o = 80^o$

…[Angle – sum property of Δ]

In cyclic quad. OAPB

$\angle AOB + \angle APB = 180^o$

….[Sum of opposite angles of a cyclic quadrilateral is 180°]

$\angle AOB + 80^o = 180^o$

$\therefore \angle AOB = 180^o - 80^o = 100^o$

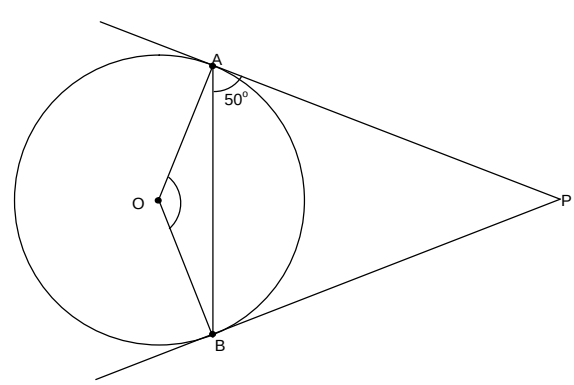

12. 2

12. Distance $=\sqrt{\left(\frac{2}{5}-\left(\frac{-8}{2}\right)\right)^2+(2-2)^2}=2$ units

13. 2 cm

13. PT = x. $\frac{PS}{SQ}=\frac{PT}{TR}\Rightarrow\frac{4}{9-4}=\frac{x}{4.5-x}\Rightarrow x=2\text{cm}$

14. $9:1$

14. $AB=1+2=3$ cm

$\Delta ABC \sim \Delta ADE$

$\therefore\ \frac{ar(ABC)}{ar(ADE)}=\frac{AB^2}{AD^2}=\frac{9}{1}$

$\therefore\ ar(\Delta ABC):ar(\Delta ADE)=9:1$

15. $k\le 4$

15. Since roots of the equation $x^2+4x+k=0$ are real

$\Rightarrow 16-4k\ge 0$

$\Rightarrow k\le 4$

16. 900

16.

Class	Frequency
0 – 100	5
100 – 200	7
200 – 300	6
300 – 400	3
400 – 500	20
500 – 600	4
600 – 700	8

$400+500=900$

17. First term = 28

17. Common difference (d) =–4

$a_7=4$

$a+(7-1)\times d=4$

$a+6d=4$

$a+6\times -4=4$

$a=4+24=28$

First term = 28

18. 25 cm

18. In Rhombus ABCD, AC = 30 cm, BC = 40 cm

$AO=15$ cm, $BO=20$ cm

$AB=\sqrt{AO^2+BO^2}=\sqrt{15^2+20^2}=25$ cm

19. k = 3

19. Roots of the equation $3x^2 - 10x + k = 0$ are reciprocal of each other

$\Rightarrow$ Product of roots = 1

$\Rightarrow \frac{k}{3} = 1 \Rightarrow k = 3$

20. a = 2

20. Put x = – a

$2a^2 + 2a(-a) + 5(-a) + 10 = 0$

5a = 10

a = 2

21. 42

21. $2r + \pi r = 108$ cm

$2r + \frac{22}{7}r = 108$ cm

$\frac{14r + 22r}{7} = 108$

$\frac{36r}{7} = 108$

$r = 21$

Diameter of the garden $= 2r = 2 \times 21 = 42$ cm

22. p = 5

22.

Class	Frequency	Class Marks (x)	$(x \times f)$
0 – 20	2	10	20
20 – 40	6	30	180
40 – 60	P	50	50p
60 – 80	5	70	350
80 – 100	2	90	180
	15 + p		730 + 50p

Mean $= \frac{\sum x \times f}{\sum f} = \frac{730 + 50p}{15 + p} = 49$

$730 + 50p = 735 + 49p$

Then p = 5

23. $a_n = a_{21} + 120$

$= (3 + 20 \times 12) + 120$

= 363

$\therefore\ 363 = 3 + (n - 1) \times 12$

$\Rightarrow\ n = 31$

31st term is 120 more than a_{21}.

OR

$a_1 = S_1 = 3 - 4 = -1$

$a_2 = S_2 - S_1 = \left[3(2)^2 - 4(2)\right] - (-1) = 5$

$\therefore d = a_2 - a_1 = 6$

Hence $a_n = -1 + (n-1) \times 6 = 6n - 7$

Alt. Method:

$S_n = 3n^2 - 4n$

$\therefore\ S_{n-1} = 3(n-1)^2 - 4(n-1) = 3n^2 - 10n + 7$

Hence $a_n = S_n - S_{n-1}$

$= (3n^2 - 4n) - (3n^2 - 10n + 7)$

$= 6n - 7$

24. 18 cm

24. PC = PA – AC
= AC – CQ (since CQ = AC)
= 12 – 3 = 9 cm
Similarly, PD = PB – BD = PA – QD (since PB = PA and QD = BD)
$= 12 - 3 = 9$ cm
So PC + PD = 18 cm

25. 0

25. Applying section formula,

$4 = \dfrac{6k+2}{k+1} = k = 1$

$m = \dfrac{-3k+3}{k+1} \Rightarrow m = 0$

P divides AB in the ratio 1 : 1 and m = 0

26. Consider $5\sqrt{6}$ to be a rational number.

$5\sqrt{6} = \dfrac{a}{b}$ where a, b are co prime integers.

$150 = \dfrac{a^2}{b^2} \Rightarrow a^2 = 150b^2$

As 150 is not a perfect square, there is no combination for integers a, b possible. This contradicts $5\sqrt{6}$ to be rational

27. 12

27.

Cylinder	Cone	Hemisphere
r = 6 h = 15	r = 3 h = 12 – 3= 9	r = 3

Volume of cylinder = [volume of cone + volume of hemisphere] $\times$ No. of toys

$$\pi r^2 h = \left[\frac{1}{3}\pi r^2 h + \frac{2}{3}\pi r^3\right] \times N$$

$$\pi(6)^2 \times 15 = \left[\frac{1}{3}\pi(3)^2 \times 9 + \frac{2}{3}\pi(3)^3\right] \times N$$

$$\pi(6)^2 \times 15 = \frac{\pi}{3}\left[(3)^2 \times 9 + 2(3)^3\right] \times N$$

$\Rightarrow$ $3 \times 36 \times 15 = (81 + 54)$ N

$\Rightarrow$ $N = \dfrac{3 \times 36 \times 15}{135}$

N = 12

Then no. of toys formed is 12

28. 374

(OR) 137.5

28. Total surface area of article

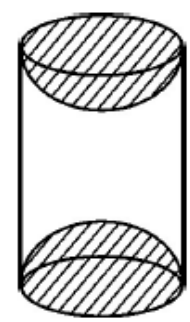

= C.S.A of cylinder + 2 $\times$ C.S.A of Hemisphere

= Curves Surface area of circle = $2\pi rh$

$\Rightarrow$ r = 3.5, h = 10 cm

$\Rightarrow$ $2 \times \dfrac{22}{7} \times 3.5 \times 10 = 220 \text{ cm}^2$

$\Rightarrow$ Surface area of Hemisphere = $2\pi r^2 = 2 \times \dfrac{22}{7} \times (3.5)^2$

$\Rightarrow$ Surface area of Hemisphere = 77 cm^2

$\Rightarrow$ Total Surface area of article = 220 + 2 $\times$ 77 = 374 cm^2

OR

Radius of cone = 24/2 = 12 cm

h = 3.5 cm

Volume of Rice = $\dfrac{1}{3}\pi r^2 h = \dfrac{1}{3} \times \dfrac{22}{7} \times 12 \times 12 \times 3.5 = 528$

Area of canvas required = Curves surface area of cone = $\pi r \ell$

$$\ell = \sqrt{(12)^2 + (3.5)^2} = \sqrt{156.25} = 12.5 \text{ cm} \Rightarrow \frac{22}{7} \times 3.5 \times 12.5 = 137.5 \text{ cm}^2$$

29. 48.25

29.

Class Interval	f	cumulative frequency
38 – 40	3	3
40 – 42	5	8
42 – 44	9	17
44 – 46	14	31
46 – 48	28	59
48 – 50	32	91
50 – 52	35	126
	126	

N = 126 $\frac{N}{2} = \frac{126}{2} = 63$

l = 48, CF = 59, f = 32, h = 2

Median $= L + \frac{\left(\frac{N}{2} - CF\right)}{f} \times h$

$= 48 + \left(\frac{63-59}{32}\right) \times 2$

$= 48 + \frac{4 \times 2}{32}$

$= 48 + \frac{1}{4}$

$= 48 + 0.25 = 48.25$

30. number of terms is 6 and common difference is 5

30. First term = 8

$T_n = 33$

$a + (n-1)d = 33$ ……(1)

$(n-1)d = 33 - 8 = 25$

$S_n = 123$ …….(2)

$\frac{n}{2}\left[2a + (n-1)d\right] = 123$

$\frac{n}{2}[2a + 25] = 123$

$\frac{n}{2} \times 41 = 123$

$\frac{n}{2} = 3$

$n = 6$

$(n-1)d = 25$

$(6-1) \times d = 25$

$5d = 25$

$d = 5$

Then number of terms is 6 and common difference is 5.

31. OP = OQ = 10 cm

PQ = 5 + 5 = 10 cm

OP = OQ = PQ = 10 cm [Sides are equal]

$\therefore \Delta POQ$ is an equilateral Δ

$\Rightarrow \angle POQ = 60^o$ [Angles of an equilateral Δ]

Area of the shaded region = Area of ΔOPQ

+ Area of Semi – circle (PBQM)

– Area of sector (OPAQ)

$$= \frac{\sqrt{3}}{4}(\text{side})^2 + \frac{1}{2}\pi r^2 - \frac{\theta}{360^o}\pi R^2$$
$$= \frac{\sqrt{3}}{4}(10)^2 + \frac{1}{2}\times\pi(5)^2 - \frac{60^o}{360^o}\pi(10)^2$$
$$= \frac{\sqrt{3}}{4}(100) + \frac{25}{2}\pi - \frac{100\pi}{6}$$
$$= 25\sqrt{3} - \frac{25\pi}{6}$$
$$= 25\left(\sqrt{3} - \frac{\pi}{6}\right)\text{cm}^2 \qquad \text{(Hence proved)}$$

32. Let sum of the ages of two children be x years father's age be y years.

$\therefore \quad y = 3x$ ……(1)

and $y + 5 = 2(x + 10)$ ……(2)

Solving equations (1) and (2)

$x = 15$ and $y = 45$

Father's present age is 45 years.

OR

Let the fraction be $\frac{x}{y}$

$\therefore \quad \frac{x-2}{y} = \frac{1}{3}$ …….(1)

and $\frac{x}{y-1} = \frac{1}{2}$ ……..(2)

Solving (1) and (2) to get $x = 7,\ y = 15$

$\therefore$ Required fraction is $\frac{7}{15}$

33. 12

33. $\text{ar}(\Delta PQR) = 4\ \text{ar}(\Delta MQN)$a where M and N are mid points of sides through Q.

$$\text{ar}(\Delta MQN) = \frac{1}{2}\left(3(-1-2) + 2(2-2) + 1(2-(-1))\right)$$
$$= \frac{1}{2}(-9+0+3) \Rightarrow 4.3$$
$$\text{ar}(\Delta PQR) = 4\times 3 = 12 \text{ sq.units.}$$

34. 8

34. For HCF of 9648, 10024.

$10024 = 9648\times 1 + 376$

$9648 = 376\times 25 + 248$

$376 = 248\times 1 + 128$

$248 = 128\times 1 + 120$

$128 = 120\times 1 + 8$

$120 = 8\times 15$

HCF = 8

35. 16, 12

35. Let side of square, = x, side of squares = y

$x^2 + y^2 = 400cm^2$ ……..(1)

$4x - 4y = 16$

$x - y = 4$ ……..(2)

$(x-y)^2 = (4)^2$

$x^2 + y^2 - 2xy = 16$

$400 - 16 = 2xy$

$384 = 2xy$

$xy = 192$

$(x+y)^2 = (x-y)^2 + 4xy$

$= (4)^2 + 4 \times 192$

$(x+y)^2 \Rightarrow (4)(196)$

$x + y = 2 \times 14 \Rightarrow x + y = 28$ ……..(3)

Add (2) and (3)

$2x = 32 \Rightarrow x = 16$

$y = 12$

36. $mT_m = nT_n$

$m[a + (m-1)]$

$= n[a + (n-1)d]$

$ma + m^2d - md$

$= an + n^2d - nd$

$m^2d - n^2d = md - nd + an - am$

$d(m^2 - n^2) = d(m-n) - a[m-n]$

$d(m^2 - n^2) = (m-n)(d-a)$

$d(m+n)(m-n) = (m-n)(d-a)$

$d(m+n) = d - a$

$d(m+n-1) = -a$

$(m+n)^{th}$ term $= a + (m+n-1)d$

$= a + \left(\frac{-a}{d}\right) \times d$

$= a - a = 0$

$(m+n)^{th}$ term is zero.

OR

a, a + d, a + 2d are three numbers.

$a + a + d + a + 2d = 18$

$3(a + d) = 18$

$(a + d) = 6$

$a = 6 - d$ ……..(i)

$a \times (a + 2d) = 5d$

$6 - d \times (6 - d + 2d) = 5d$

$36 - d^2 = 5d$

$d^2 + 5d - 36 = 0$

$(d + 9) \times (d - 4) = 0$ then d = 4 and d = –9

Case – I $d = 4$

Then a = 2

Case – II d = –9

Then a = 15

(2, 6, 10) and (15, 6, –3)

37. 30°

37. Given : Join OR, OQ and OP.

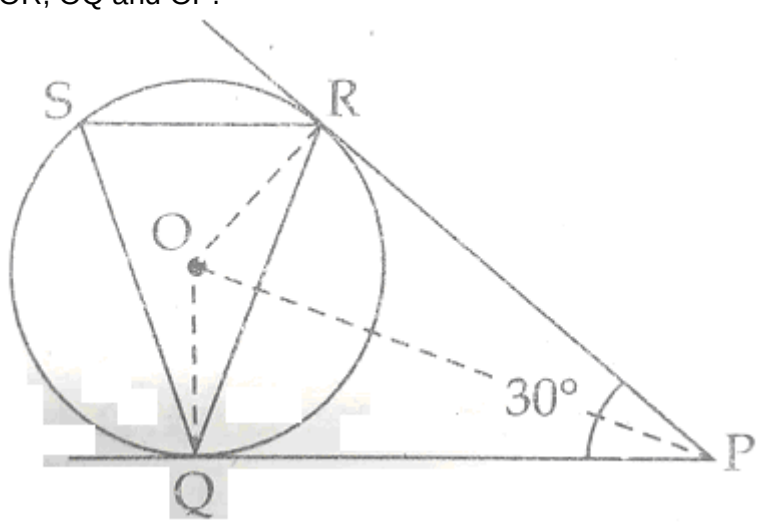

PR = PQ [Tangents drawn from external point are equal]

$\Rightarrow \angle PRQ = \angle PQR$

[Angles opposite equal sides are equal]

In ΔPQR ,

$\Rightarrow \angle PRQ + \angle RPQ + \angle PQR = 180^o$

$\Rightarrow 30 + 2\angle PQR = 180^o$

$\Rightarrow \angle PQR = \frac{(180 - 30)^o}{2} = 75^o$

$\Rightarrow SR \parallel QP$ and QR is a transversal.

$\because \angle SRQ = \angle PQR$ [Alternate interior angles]

$\therefore \angle SRQ = 75^o$

$\Rightarrow \angle ORP = 90^o$ [Tangents are $\perp$ to the radius through the point of contact]

$\angle OQP = 90^o$

In Quadrilateral PQOR,

$\therefore \angle PQO + \angle QOR + \angle ORP + \angle RPQ = 360^o$

$90^o + \angle QOR + 90^o + \angle 30^{oi} = 360^o$

$\angle QOR = 360^o - 210^o = 150^o$

$\Rightarrow \angle QSR = \frac{1}{2}\angle QOR$

$\Rightarrow \angle QSR = \frac{150^o}{2} = 75^o$

In ΔRSQ,

$\angle RSQ + \angle QRS + \angle RQS = 180^o$

$75^o + 75^o + \angle RQS = 180^o$

$\therefore \angle RQS = 180^o - 150^o = 30^o$

38. $9.03\ cm^2$

38. In ΔOPQ

$OP = OQ \Rightarrow \angle OPQ = \angle OQP = 60^o$

$\Rightarrow \Delta OPQ$ is equilateral

Area of minor segment

= Area of minor sector – Area of Δ

$= \frac{60}{360} \times 3.14 \times 10^2 - \frac{\sqrt{3}}{4} \times 10^2$

$= 9.03\,cm^2$

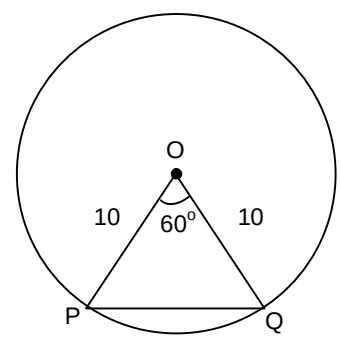

39. Let the smaller tap fills the tank in x hrs

$\therefore$ the larger tap fills the tank in $(x-2)$ hrs.

Time taken by both the taps together $= \frac{15}{8}$ hrs.

Therefore $\frac{1}{x} + \frac{1}{x-2} = \frac{8}{15}$

$\Rightarrow 4x^2 - 23x + 15 = 0$

$\Rightarrow (4x-3)(x-5) = 0$

$x \neq \frac{3}{4} \therefore x = 5$

Smaller and larger taps can fill the tank separately in 5 hrs. and 3 hrs. respectively.

OR

Let the speed of the boat in still water be x km/hr and speed of the stream be y km/hr.

Given $\frac{30}{x-y} + \frac{44}{x+y} = 10$ …….(i)

and $\frac{40}{x-y}+\frac{55}{x+y}=13$ ……..(ii)

Solving (i) and (ii) to get

$x+y=11$ …….(iii)

and $x-y=5$ …….(iv)

Solving (iii) and (iv) to get $x=8,\ y=3$

Speed of boat = 8 km/hr and speed of stream = 3 km/hr

40. Side = a units

Diagonal $=a\sqrt{2}$ units

$$\Delta=\frac{\sqrt{3}}{4}a^2=\Delta'=\frac{\sqrt{3}}{4}\left(a\sqrt{2}\right)^2=\frac{\sqrt{3}}{4}a^2\times 2=2\Delta$$

$\Delta'=2\Delta$

OR

If $\Delta ABC\sim\Delta PQR$

$$\frac{ar\left(\Delta ABC\right)}{ar\left(\Delta PQR\right)}=\left(\frac{AB}{PQ}\right)^2=\left(\frac{AC}{PR}\right)^2=\left(\frac{BC}{QR}\right)^2 \quad .....(i)$$

$$\frac{ar\left(\Delta ABC\right)}{ar\left(\Delta PQR\right)}=1 \text{ (given)} \quad ……(ii)$$

From (i) and (ii) AB = PQ, AC = PR, BC = QR